Low-Profile Apartment House Operator

MODEL APT

COMMERCIAL DOOR OPERATOR

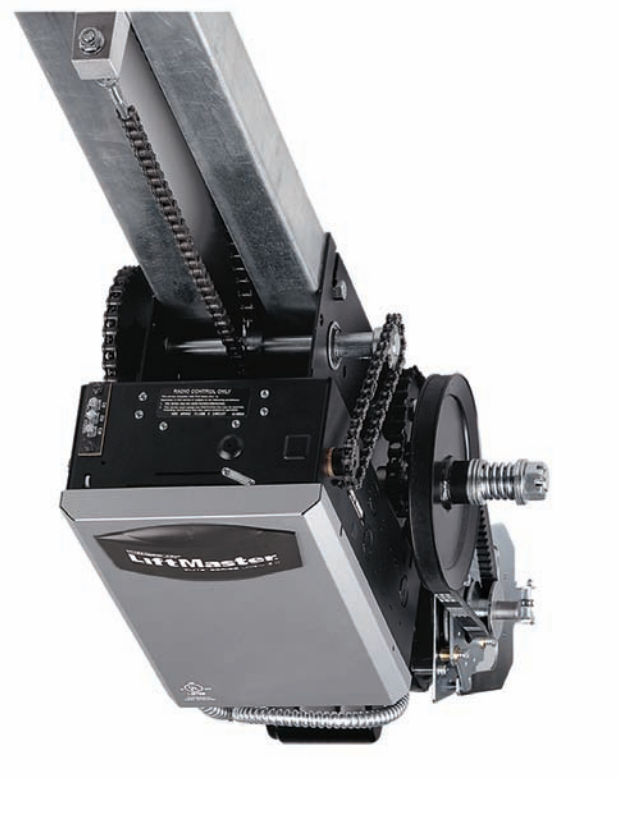

- Resilient-mount motor
- Low-profile design
- Industrial ball bearings on output shaft
- Quiet-gliding rail spacers
- Auto-reconnect trolley assembly with nylon inserts
- Solenoid brake, standard
- 115V, 208/230V, 460V, 575V, 24V NEC Class 2 Circuit with 40VA transformer

Includes the Logic 3.0 board and the exclusive Maintenance Alert System™

Logic 3.0 Technology

Elite Series™ Commercial Door Operators are engineered, manufactured and tested to provide reliable service to meet the toughest commercial applications.

Added Value

- Built-in 3-channel, 315MHz radio receiver accepts up to 23 Security+® or unlimited DIP switch remote controls.
- All LiftMaster® 3-button remotes can be programmed for open/close/stop operation.
- Maintenance Alert System™ lets you establish a routine maintenance schedule based on the number of cycles and/or calendar date. Includes self-diagnostic system for easy troubleshooting.
- Timer-to-close may be set to close in 5-second or 1-minute increments.
- Thermal motor overload can be reset from the 3-button control station.
- Built-in programmable mid-stop.
- Built-in programmable maximum run timer.

Reliability

- Switchless motor eliminates stuck start switch and motor malfunctions on single-phase operators.
- All high-voltage connections have been removed from the board for safer installation and improved reliability.
- 1-1/2 second delay-on-reverse helps prevent door and operator wear.

Programming Simplicity

- Selector dial replaces DIP switches for selecting wiring types and programming, including failsafe and non-failsafe wiring.
- Diagnostic LEDs speed installation and troubleshooting.
- Motor direction jumper lets you change motor direction by simply moving a jumper.

CHAMBERLAIN®
LiftMaster®
ELITE SERIES™ LOGIC 3.0

APT

COMMERCIAL DOOR OPERATOR

MAXIMUM DOOR AREA (SQ. FT.)				
STANDARD SECTIONAL	24 GA./22 GA. STEEL	20 GA. STEEL	18 GA. STEEL	———
	ALUMINUM DOORS	WOOD DOORS	———	———
	FIBERGLASS DOORS	20 GA. STEEL INSULATED	20 GA. STEEL INSULATED	16 GA. STEEL INSULATED
SQ. FEET	250	225	150	100

NOTE: On steel insulated doors, a 24-gauge back panel is assumed.

Standard Features

- **Low-Profile Design**
  Low-profile design can be ceiling-mounted for low headroom applications.
- **Auto-Reconnect Trolley Assembly**
  Spring-loaded trolley features nylon inserts for quiet operation and auto-reconnect feature, eliminating the need to manually re-attach the door arm to the trolley after emergency disconnect.
- **Quiet Operation**
  A quality resilient-mount motor, nylon inserts on trolley assembly and nylon quiet-gliding chain guides on rail spacers provide quiet, smooth operation.
- **Motor**
  Continuous-duty high-starting torque motor with instant reverse and overload protection. Available in 1/2 HP; single-phase capacitor start motors. Removable without affecting limit switch settings.
- **Operator/Motor Control**
  Solid-state electronics with microprocessor-driven logic and Triac Circuitry motor switching (NEMA 1 enclosure).
- **Wiring Type (L3)**
  C2 (factory default), B2, D1 and E2 wiring types are available. Failsafe (T, TS and FSTS) wiring can be selected with the addition of a CPS-L, CPS-LN4 or failsafe edge and CPS3 card.
- **Control Circuit**
  5V DC NEC Class 2 (logic), 24V DC NEC Class 2 (mechanical).
- **Drive Reduction**
  First-stage heavy-duty 4L V-belt; second and third stages #41 chain; output on trolley #48 chain.
- **Brake**
  Heavy duty solenoid-actuated brake.
- **Bearings**
  Industrial ball bearings on the output shaft; heavy-duty, oil-filled on reduction shafts.
- **Friction Clutch**
  Adjustable friction clutch helps protect against major damage to door and operator should the door meet an obstruction.
- **Push Button Station**
  3-button station for open/close/stop functions is standard for all operators. Controls with 1, 2 and 3 buttons are available.
- **Radio Receiver & External Radio Control Terminal**
  315MHz radio receiver included. Accepts up to 23 Security+® remote controls or unlimited DIP switch remotes. External terminals provide quick, convenient connections for retrofitting or adding radio controls.
- **Construction**
  NEMA 1 type electrical box, heavy-duty 11-gauge steel frame with durable powdercoat finish, all reduction sprockets drilled and pinned to shafts.
- **Rail Assembly**
  High-strength dual L-rail track and quick-mount header bracket which provides fast, swing-up installation.

Value Added Standard Features

- **Timer-to-Close**
  Automatically closes the door – programmable in 5-second or 1-minute increments. Part of the CPS-L, CPS and CPS-LN4 photo-eye packages or in the Logic 3.0 plug-in card package.
- **Maximum Run Timer**
  Signals door to reverse or stop if closing time exceeds maximum by more than 10 seconds.
- **Mid-Stop**
  Stops door at programmable mid-stop during open travel.
- **Delay-on-Reverse Circuit**
  A 1.5 second delay-on-reverse circuit to prevent premature door and operator wear.

Control Accessories and Options

- **CPS® Commercial Protector System®:**
  CPS(M), CPS-N4(M), CPS-L(L3), CPS-LN4(L3) ***(recommended)***
  "Non-contact" photo safety sensor designed to sense an obstruction and signal the door operator to reverse to open.
- **Sensing Edge** ***(recommended)***
  Senses an obstruction and signals door operator to stop or reverse upon contact. Either an electric or pneumatic sensing device can be added to bottom edge of door. Requires D1, C2 or B2 wiring.
- **Transmitters**
  1- and 3-button transmitters available for Logic 3.0. 3-button transmitter can be programmed for open/close/stop functionality. Radio receiver and transmitters available for mechanical operators.
- **Treadle**
  Signals door operator to open and/or close when vehicle depresses treadle.

Available Plug-in Options for the Logic 3.0 Control Board (L3)

- **Auxiliary Contact Board**
  Used to operate security, warning, heating or other 5V to 240V devices. Features both normally open and closed contacts that actuate in conjunction with limit switches.
- **Red/Green Warning Light**
  Provides safety warning prior to close (when using timer-to-close feature).
- **CPS3 Option**
  Enables the addition of a second set of photo-eyes or 2- or 4-wire, self-monitoring edge.

Technical Information

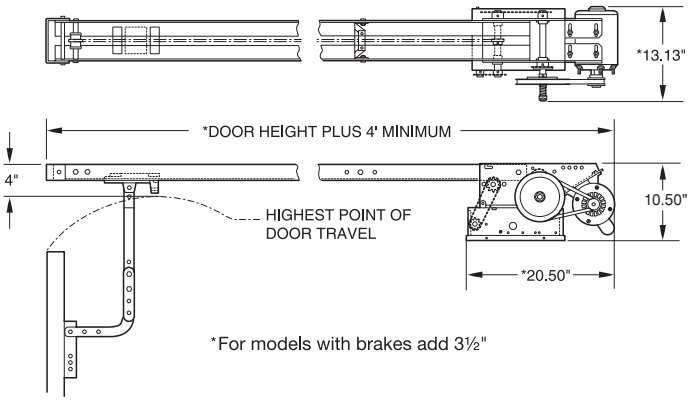

CHAMBERLAIN®
LiftMaster®

THE CHAMBERLAIN GROUP, INC.
845 Larch Avenue • Elmhurst, Il 60126
www.liftmaster.com • http://specs.chamberlain.com/architectscorner

I.C./F.C.C. Certified

TWO-YEAR WARRANTY

Chamberlain reserves the right to make design or specification changes without notice.
©2008 The Chamberlain Group, Inc. Printed in U.S.A. 6/08 LMCD3APT