Heavy Industrial-Duty Gear-Reduced Hoist Operator

MODEL GH

COMMERCIAL DOOR OPERATOR

- Removable hinged electrical box cover
- Easily field-converted in seconds for left- or right-handed drive and hoist
- 115V, 208/230V, 460V, 575V, 24V NEC Class 2 Circuit with 40VA transformer

Includes the Logic 3.0 board and the exclusive Maintenance Alert System™

Logic 3.0 Technology

Elite Series™ Commercial Door Operators are engineered, manufactured and tested to provide reliable service to meet the toughest commercial applications.

Added Value

- Built-in 3-channel, 315MHz radio receiver accepts up to 23 Security+® or unlimited DIP switch remote controls.
- All LiftMaster® 3-button remotes can be programmed for open/close/stop operation.
- Maintenance Alert System™ lets you establish a routine maintenance schedule based on the number of cycles and/or calendar date. Includes self-diagnostic system for easy troubleshooting.
- Timer-to-close may be set to close in 5-second or 1-minute increments.
- Thermal motor overload can be reset from the 3-button control station.
- Built-in programmable mid-stop.
- Built-in programmable maximum run timer.

Reliability

- Switchless motor eliminates stuck start switch and motor malfunctions on single-phase operators.
- All high-voltage connections have been removed from the board for safer installation and improved reliability.
- 1-1/2 second delay-on-reverse helps prevent door and operator wear.

Programming Simplicity

- Selector dial replaces DIP switches for selecting wiring types and programming, including failsafe and non-failsafe wiring.
- Diagnostic LEDs speed installation and troubleshooting.
- Motor direction jumper lets you change motor direction by simply moving a jumper.

CHAMBERLAIN®
LiftMaster®
ELITE SERIES™ LOGIC 3.0

GH

COMMERCIAL DOOR OPERATOR

MAXIMUM DOOR AREA (SQ. FT.)							
ROLLING		24 GA. STEEL	22 GA. STEEL	———	20 GA./18 GA. STEEL	16 GA. STEEL	———
		ALUMINUM GRILLES	ALUMINUM DOORS	———	STEEL GRILLES	———	———
SECTIONAL		———	24 GA./22 GA. STEEL	20 GA. STEEL	———	16 GA. STEEL	———
		FIBERGLASS	ALUMINUM DOORS	WOOD DOORS	———	———	———
		———	———	24 GA. STEEL INSULATED	———	20 GA. STEEL INSULATED	16 GA. STEEL INSULATED
HORSEPOWER	1/2	325	300	275	250	225	175
	3/4	480	430	390	340	275	225
	1	650	560	500	430	325	300
	1-1/2	———	———	680	540	425	375
	2	———	———	———	640	560	460
	3	———	———	———	875	840	620
	5	Call for details					

NOTE: On steel insulated doors, a 24-gauge back panel is assumed.
If a heavier back panel is supplied, use the next higher HP rating.

Standard Features

- **Motor**
  Continuous-duty high-starting torque motor with instant reverse and overload protection. Available in 1/2 HP to 5 HP; single- or three-phase. Capacitor start on single-phase. Removable without affecting limit switch settings.
- **Auxiliary Chain Hoist**
  Reduced drive chain hoist with electrically interlocked floor level disconnect for manual operation. Hoist wheel is easily moved to right- or left-hand side of unit, eliminating the need to order left- or right-hand mounting.
- **Wiring Type(L3)**
  C2 (factory default), B2, D1 and E2 wiring types are available. Failsafe (T, TS and FSTS) wiring can be selected with the addition of a CPS-L, CPS-LN4 or failsafe edge and CPS3 card.
- **Drive Reduction**
  45:1 using heavy-duty gears running in oil bath. Cast iron housing. Special "all-climate" synthetic gear oil for greater low-temperature performance.
- **Brake**
  Heavy-duty solenoid-actuated brake.
- **Bearings**
  Sealed roller bearings in gear reducer.
- **Emergency Disconnect**
  Spring-loaded disconnect for emergency manual operation.
- **Push Button Station**
  3-button station for open/close/stop functions is standard for all operators. Controls with 1, 2 and 3 buttons are available.
- **Radio Receiver & External Radio Control Terminal**
  315MHz radio receiver included as standard on Logic 3.0. Accepts up to 23 Security+® remote controls or unlimited DIP switch remotes. External terminals provide quick, convenient connections for retrofitting or adding radio controls on logic or mechanical operators.
- **Control Circuit**
  5V DC NEC Class 2 (logic) 24V AC (mechanical).

Value Added Standard Features

- **Timer-to-Close**
  Automatically closes the door – programmable in 5-second or 1-minute increments. Part of the CPS-L, CPS and CPS-LN4 photo-eye packages or in the Logic 3.0 plug-in card package.
- **Maximum Run Timer**
  Signals door to reverse or stop if closing time exceeds maximum by more than 10 seconds.
- **Mid-Stop**
  Stops door at programmable mid-stop during open travel.
- **Delay-on-Reverse Circuit**
  A 1.5 second delay-on-reverse circuit to prevent premature door and operator wear.

Control Accessories and Options

- **CPS® Commercial Protector System®:**
  CPS(M), CPS-N4(M), CPS-L(L3), CPS-LN4(L3) ***(recommended)***
  "Non-contact" photo safety sensor designed to sense an obstruction and signal the door operator to reverse to open.
- **Sensing Edge** ***(recommended)***
  Senses an obstruction and signals door operator to stop or reverse upon contact. An electric or pneumatic sensing device can be added to bottom edge of door. Requires D2, C2 or B2 wiring.
- **Rolling Door Interlock Switch**
  Interlock switch disables the operator control circuit when a manual door lock is engaged, preventing damage to the door and operator.
- **Friction Clutch**
  Adjustable inline friction clutch helps protect against major damage to door and operator should the door meet an obstruction.
- **Transmitters**
  1- and 3-button transmitters available. Can be programmed for open/close/stop functionality.

Available Plug-in Options for the Logic 3.0 Control Board (L3)

- **Auxiliary Contact Board**
  Used to operate security, warning, heating or other 5V to 240V devices. Features both normally open and closed contacts that actuate in conjunction with limit switches.
- **Red/Green Warning Light**
  Provides safety warning prior to close (when using timer-to-close feature).
- **CPS3 Option**
  Enables the addition of a second set of photo-eyes or 2- or 4-wire, self-monitoring edge.

Available Mechanical Reversing Contactor Circuit (M)

Industrial linear contactor provides significantly longer control runs than conventional contactors. Circuit provides easy selection between C2 and B2 wiring with the movement of a single wire.

Technical Information

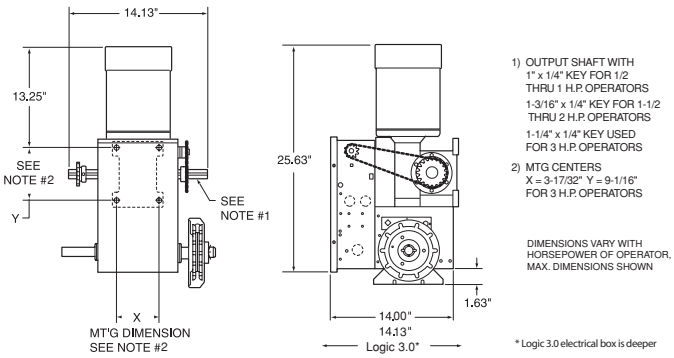

CHAMBERLAIN®
LiftMaster®

THE CHAMBERLAIN GROUP, INC.
845 Larch Avenue • Elmhurst, Il 60126
www.liftmaster.com • http://specs.chamberlain.com/architectscorner

c UL us | IDA International Door Association | DASMA | I.C./F.C.C. Certified | **TWO-YEAR WARRANTY**

Chamberlain reserves the right to make design or specification changes without notice.
©2008 The Chamberlain Group, Inc. Printed in U.S.A. 6/08 LMCD30GH